CprE 288 – Introduction to Embedded Systems (GPIO Port and Pin Usage)

Instructor:
Dr. Diane Rover

CyBot Labs

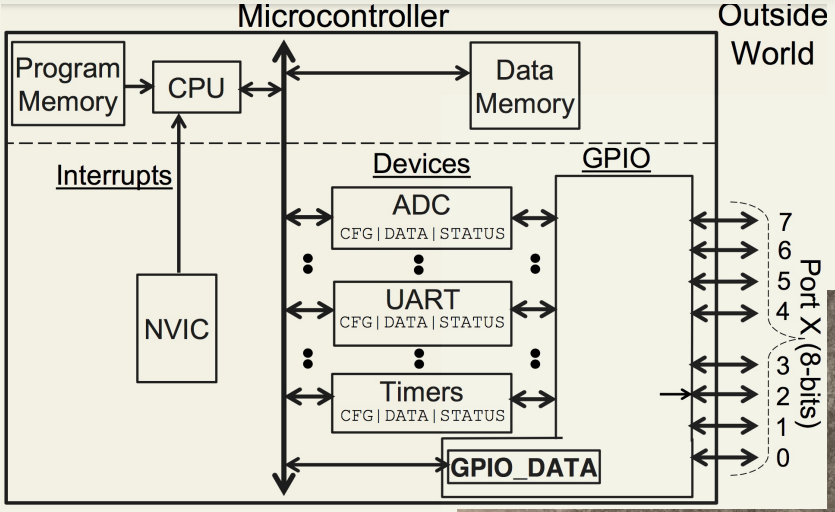

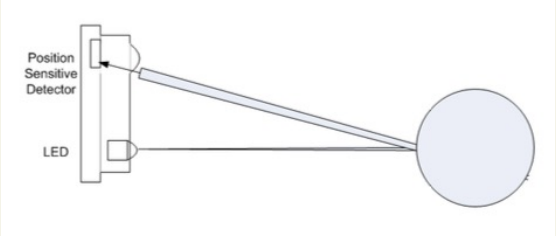

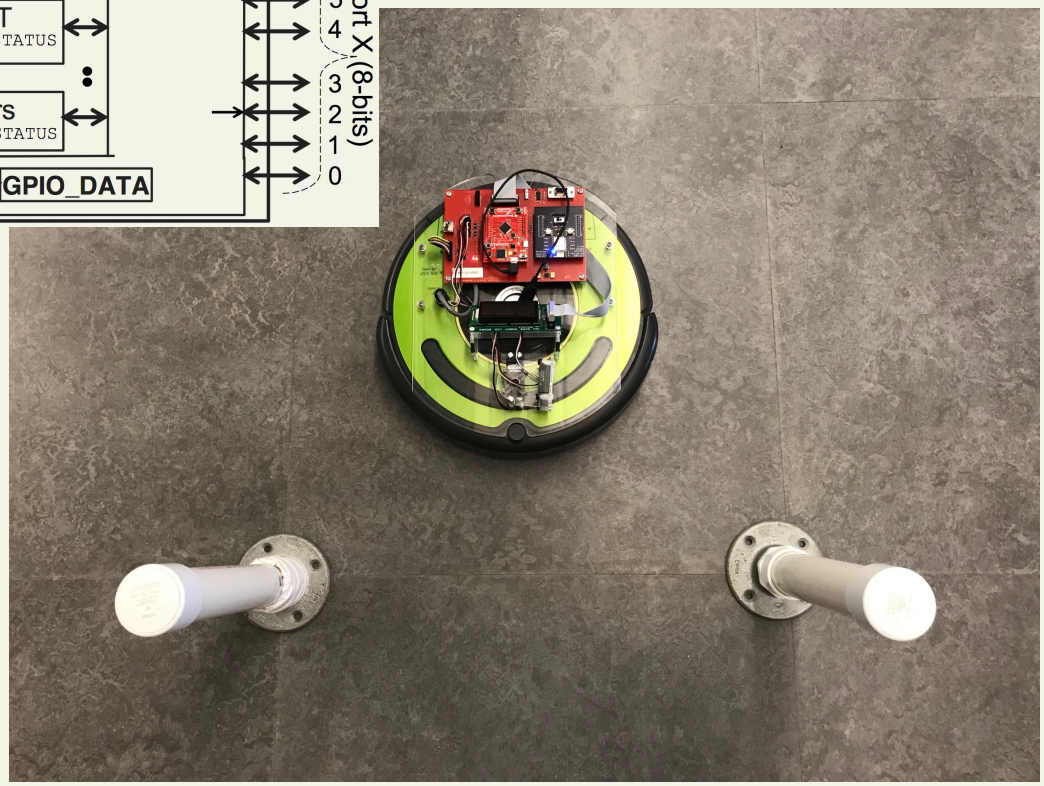

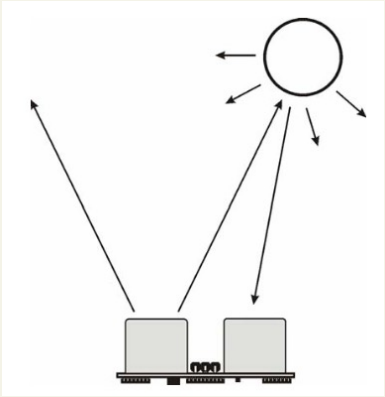

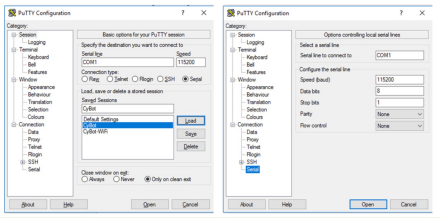

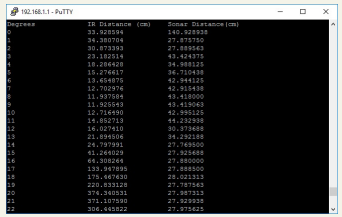

Older Lab: https://www.youtube.com/watch?v=qyUFNEJBems

Block Diagram for TM4C MCU

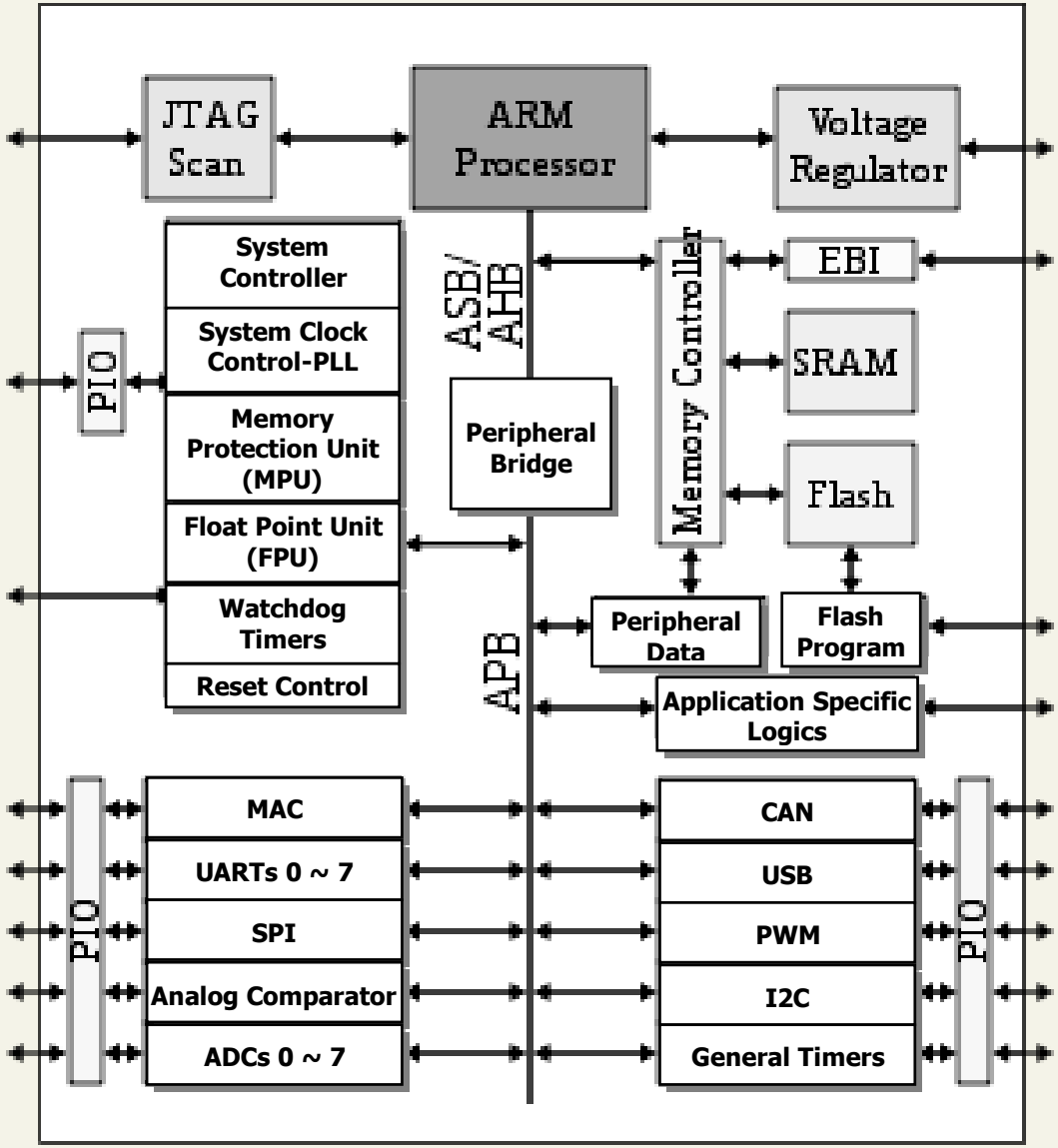

Figure 2.1 The block diagram for a general MCU.

GPIO Port and Pin Usage

1. List the MCU peripheral units used in Labs 1-10
2. List all GPIO ports and pins used in Labs 1-10

Note: Consider ports/pins used in “library” functions such as open_interface.c, lcd.c. For example:

- Port C
  - PC4: UART4 Rx (OI)
  - PC5: UART4 Tx (OI)

Resource

See last page of file Cybot-Baseboard-LCD-Schematic.pdf

LP: LaunchPad board

OI: Open Interface (iRobot)

LCD: Display

PB: Push Button

SW: Switch

Only some of these functions and pins are used in CPRE 288 labs.

Review lab code as needed.

GPIO Port A	Function	288 Inputs/Outputs
Pin 7:	LP_I2C1_SCL / IMU SCL	
Pin 6:	LP_I2C1_SDA / IMU SDA	
Pin 5:	SSIO CLK	
Pin 4:	SSIO Fss	
Pin 3:	SSIO Rx	
Pin 2:	SSIO Tx	
Pin 1:	UART0 Tx	
Pin 0:	UART0 Rx	
GPIO Port B		
Pin 7:	IMU I2C ADDR / GPIO 1	T0CCP1
Pin 6:	IMU I2C RSTN / GPIO 2	MOPWM0
Pin 5:	SERVO_2	
Pin 4:	IR1	AIN10
Pin 3:	PING_CAP_1	T3CCP1
Pin 2:	IMU I2C INT / GPIO 3	
Pin 1:	LP_UART1_Tx	
Pin 0:	LP_UART1_Rx	
GPIO Port C		
Pin 7:		
Pin 6:		
Pin 5:	OI_UART4_Tx	
Pin 4:	OI_UART4_Rx	
Pin 3:	JTAG TCK/SWCLK	
Pin 2:	JTAG TMS/SWDIO	
Pin 1:	JTAG TDI	
Pin 0:	JTAG TDO/SWO	
GPIO Port D		
Pin 7:	ADDR_JMP_4	
Pin 6:	LCD_RW	
Pin 3:	LCD_RS	
Pin 2:	LCD_EN	
Pin 1:	Connected to other ports through R9 and R10	
Pin 0:		
GPIO Port E	PUSH BUTTONS	
Pin 5:	AIN8	
Pin 4:	AIN9	
Pin 3:	PB_SW4	
Pin 2:	PB_SW3	
Pin 1:	PB_SW2	
Pin 0:	PB_SW1	
GPIO Port F		
Pin 4:	LCD DATA7	
Pin 3:	LCD DATA6	
Pin 2:	LCD DATA5	
Pin 1:	LCD DATA4	
Pin 0:	USR_SW2	OI shutoff

RED and CYAN labels are reserved pins, okay to ignore for this activity.